SurroundLite

Cove Systems

SurroundLite™ Cove Systems

Few luminaires have been more in need of an upgrade than cove lights, long stifled by complicated details and inconsistent, time-consuming aiming.

Armstrong Ceiling Systems and Axis saw an opportunity to reduce clutter and simplify design. So we joined forces to codevelop the best possible cove lighting solution from the ground up.

The result: A foolproof, pre-engineered cove system and an aim-free, high-performance cove light that set the new standard for cove lighting.

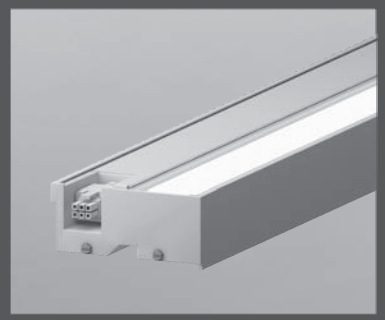

Cove Perfekt - Ceiling

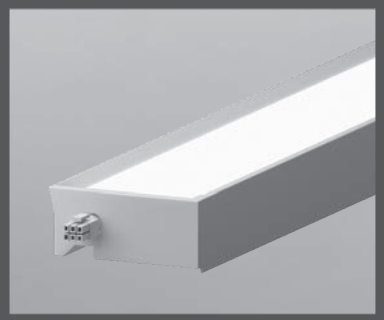

Cove Perfekt - Wall

Cove Perfekt

The new standard for cove lighting

Cove Perfekt
Ceiling

Cove Perfekt
Wall

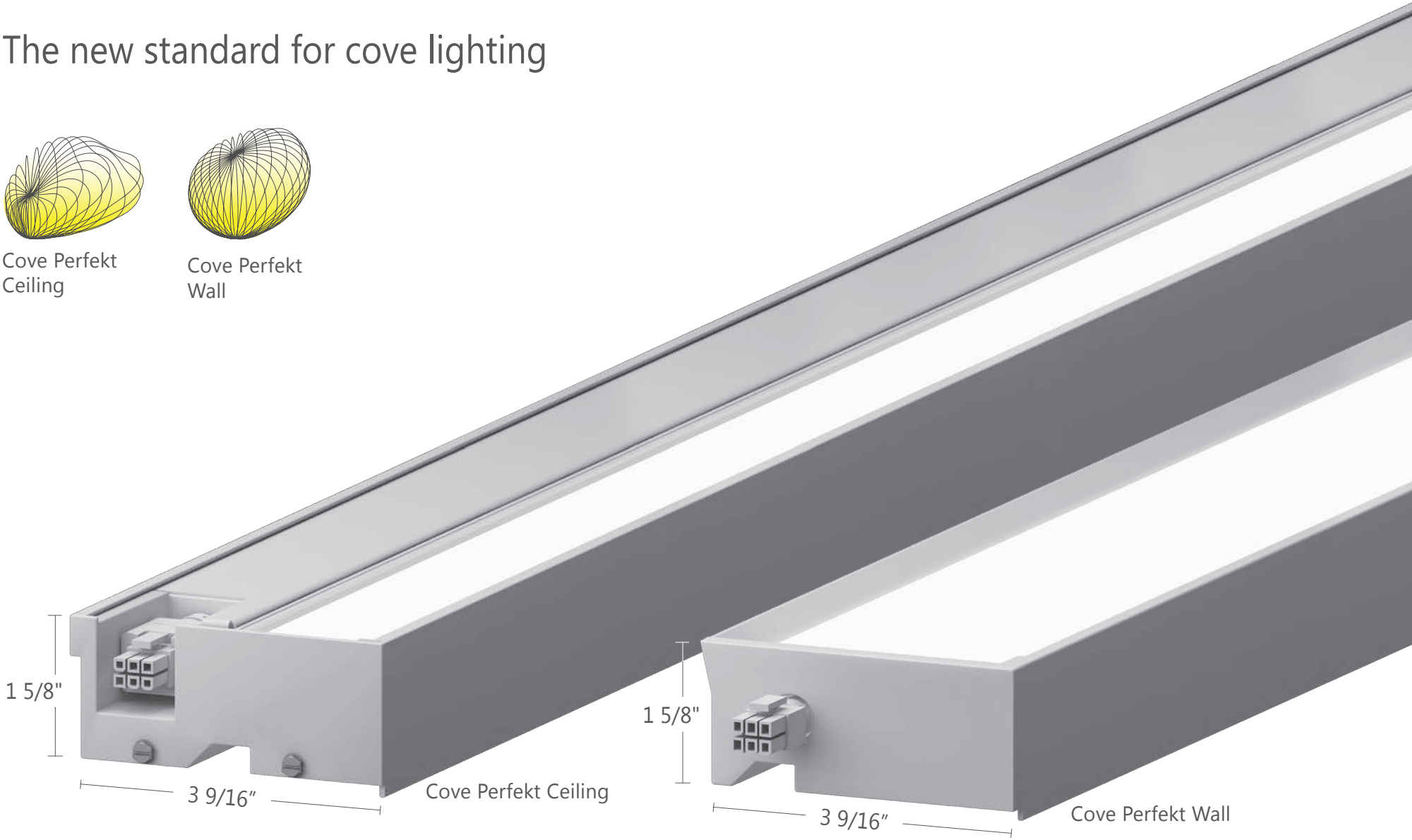

Pre-engineered quality cove lighting system

In partnership with Armstrong Ceiling Systems, Cove Perfekt takes the guesswork out of cove lighting. Design smaller coves, eliminate hot spots, do away with aiming, improve the overall cove light quality with the power of SurroundLite™ and save energy like never before with this simple-to-specify system.

- ☑ **Up to twice the efficiency of other cove products.**
- ☑ **Simple, easy-to-specify system.**
- ☑ **Foolproof mounting. Aim-free lighting.**
- ☑ **Available with color tuning options.**

Easy Installation

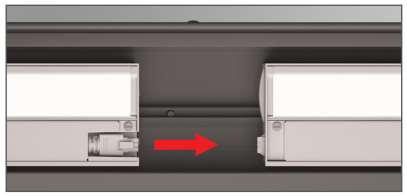
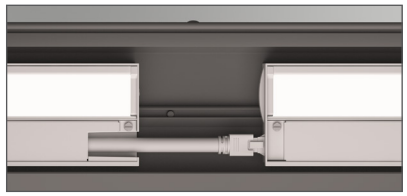
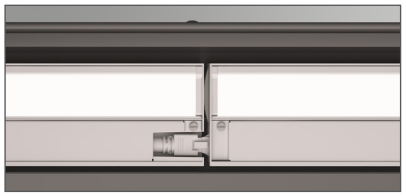

Telescoping Cable for Easy Installation

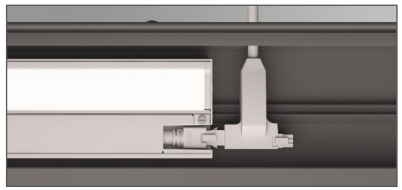

T - End Power Feed

Cove Perfekt & Armstrong Axiom Cove: The Perfect Partnership

Up to 90% less labor to install coves with easy onsite trade coordination, luminaires positioned at the very front of the cove to maximize efficiency and a keyed system to ensure proper mounting of luminaires.

Axiom cove ordered separately. Cove Perfekt by Axis may also be used in other cove installations. To order an Axiom Indirect Cove, contact your local Armstrong sales representative or call 1-877-276-7876. armstrong.com/axiomlightcoves

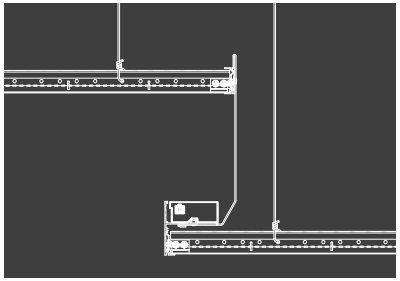

Axiom Ceiling
Classic Profile

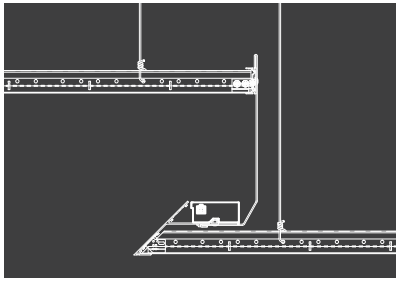

Axiom Ceiling
Knife Edge® Profile

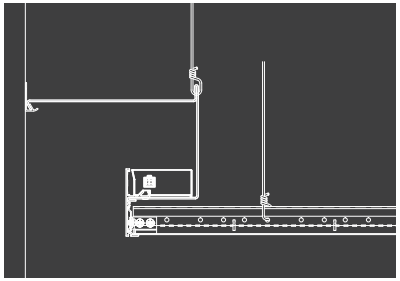

Axiom Wall
Classic Profile

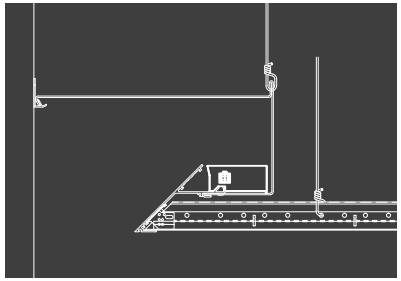

Axiom Wall
Knife Edge® Profile

Armstrong®
CEILING SYSTEMS